Rev.No.	Ch.Let	Alterations	Date	Sign.	Appd.

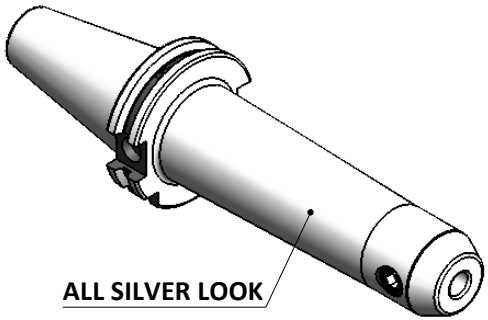

All Dimensions are in MM

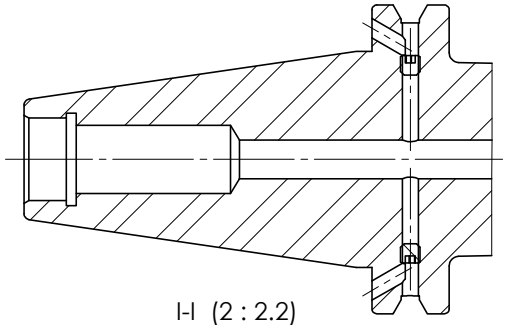

CUSTOMER APPROVAL REQUIRED	
APPROVED BY	
DATE	

FOR QUOTATION PURPOSE ONLY

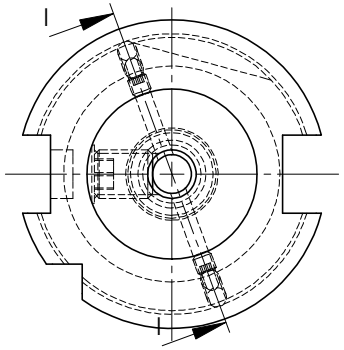

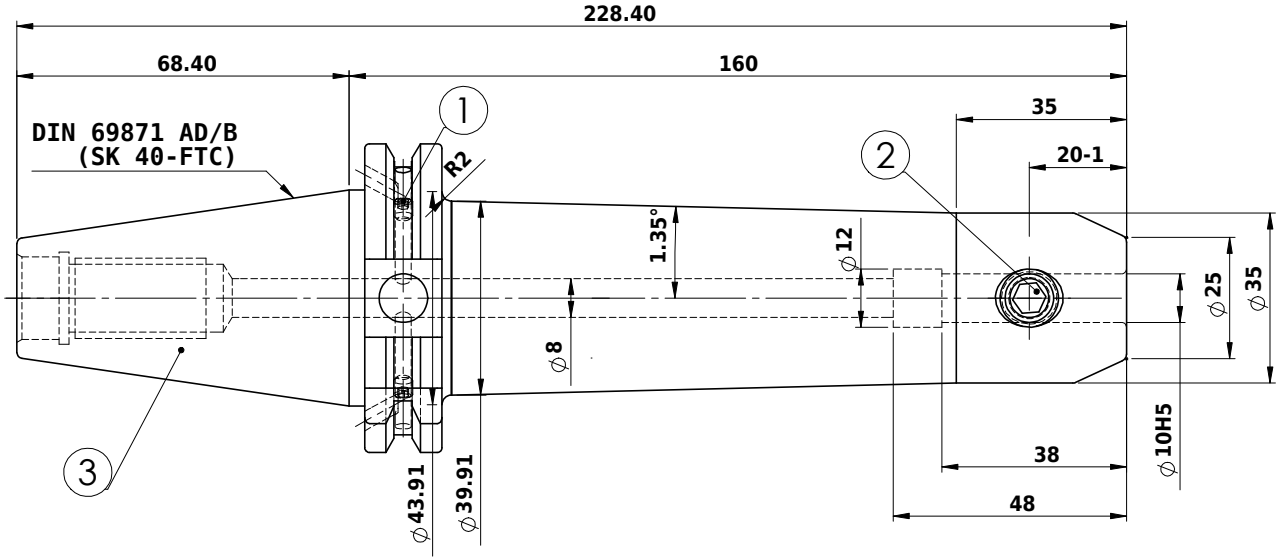

Label :
2002364.1002
WELDON-AUFNAHME
WELDON HOLDER
DIN69871 SK40 ADB
WE 10 mm x 160 mm
G2.5 / 25000

NOTE :

BALANCING G2.5 AT 25000 RPM

WEIGHT : 1.8 kg

MARKING : DIN 69871 AD/B SK40 WE10H160
G2.5 25000 U/MIN

ITEM NO.	PART NUMBER	DESCRIPTION	QTY.
1	GS-M4x4	GRUB SCREW-(B.O)	2
2	GS-M10X12-DIN1835-B	GRUB SCREW-(B.O)	1
3	SK40 EM 10 160 FTC WW.	END MILL HOLDER	1

μm	0.012	0.025	0.05	0.1	0.2	0.4	0.8	1.6	3.2	6.3	12.5	25	50
GRADES		N1	N2	N3	N4	N5	N6	N7	N8	N9	N10	N11	N12
SYMBOLS													~

TOLERANCE
FREE DIMENSIONS TOLERANCE

Dimns.	Dia	Length
0.5 to 3	±0.05	±0.10
3 to 6	±0.10	±0.15
6 to 30	±0.15	±0.20
30 to 120	±0.20	±0.25
120 to 500	±0.30	±0.50

MATERIALS: 16MnCr5

2015	NAME	DATE
DRAWN	Bala	30/06
CHECKED	RVL	30/06
APPROVED		
SCALE : NTS	QTY. :	

2002364.1002

PART NAME: END MILL HOLDER

DRAWING No. **SK40 EM 10 160 FTC WW.**

REV. 00