Rev.No.	Ch.Let	Alterations	Date	Sign.	Appd.

All Dimensions are in MM

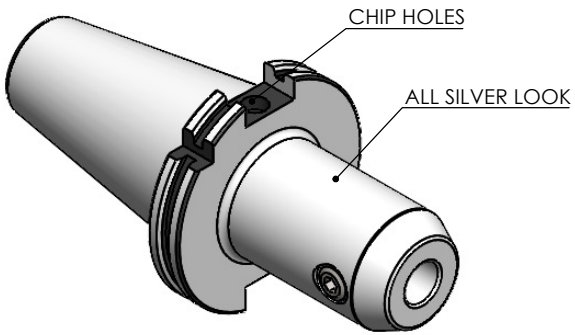

For Customer Approval

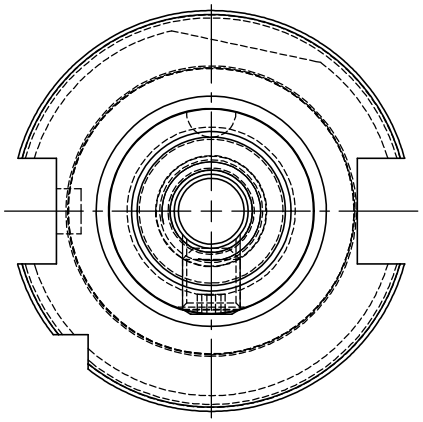

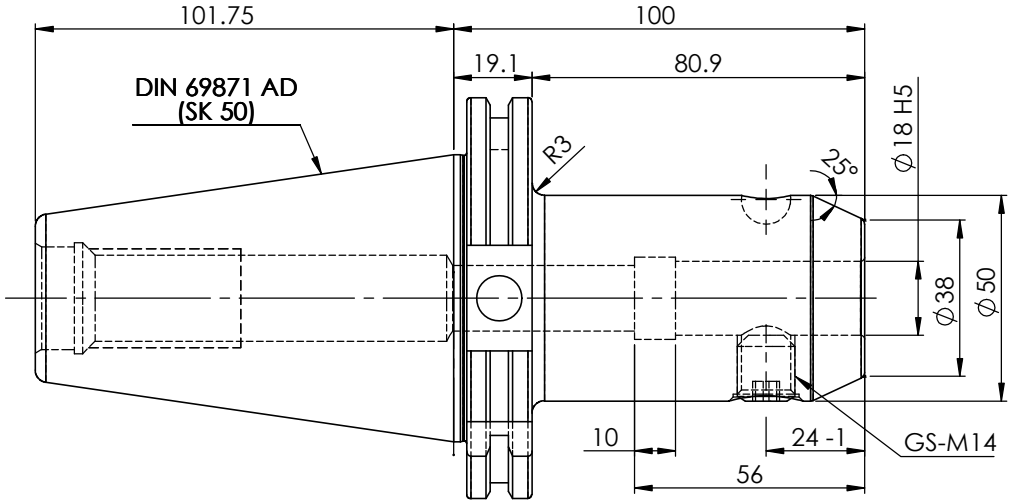

LABLE :

2002363.1801
WELDON-AUFNAHME
WELDON HOLDER
ISO 7388-1 (DIN69871) SK50 AD
WE 18 mm x 100 mm
G6.3 / 15000 U/MIN

Notes	
Balancing Value	G6.3 @15000RPM
Approx Weight	3.6Kg

MARKING : ISO 7388-1 (DIN 69871) SK50 AD WE18H100
G6.3 15000 U/MIN

2	GS-M14X16-DIN1835-B	GRUB SCREW-(B.O)	1
1	FWS501A-EMH18100	SK50EM18100WW	1
ITEM NO.	PART NUMBER	DESCRIPTION	QTY.

μ m	0.012	0.025	0.05	0.1	0.2	0.4	0.8	1.6	3.2	6.3	12.5	25	50
GRADES		N1	N2	N3	N4	N5	N6	N7	N8	N9	N10	N11	N12
SYMBOLS													

TOLERANCE		
FREE DIMENSIONS TOLERANCE		
Dimns.	Dia	Length
0.5 to 3	± 0.05	± 0.10
3 to 6	± 0.10	± 0.15
6 to 30	± 0.15	± 0.20
30 to 120	± 0.20	± 0.25
120 to 500	± 0.30	± 0.50

MATERIALS: 16MnCr5

2021	NAME	DATE
DRAWN	SVR	30/08
CHECKED	RVL	30/08
APPROVED		
SCALE : NTS	QTY. :	

PART NAME: SK50EM18100WW

2002363.1801

DRAWING No. FWS501A-EMH18100

REV. 00