Rev.No.	Ch.Let	Alterations	Date	Sign.	Appd.

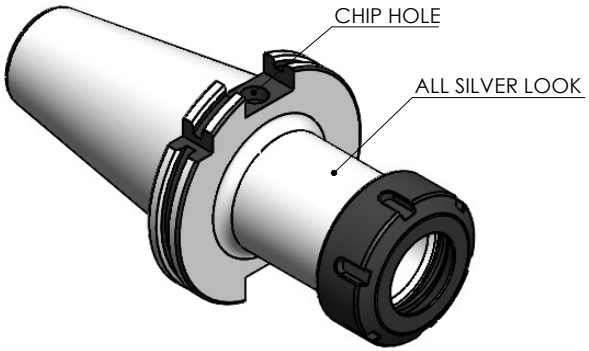

All Dimensions are in MM

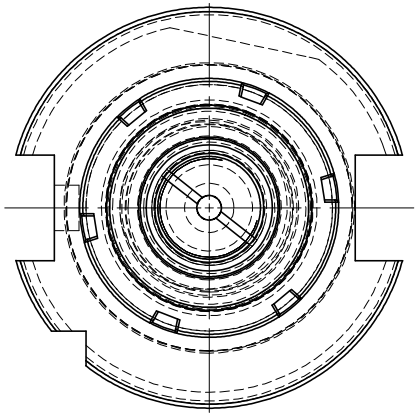

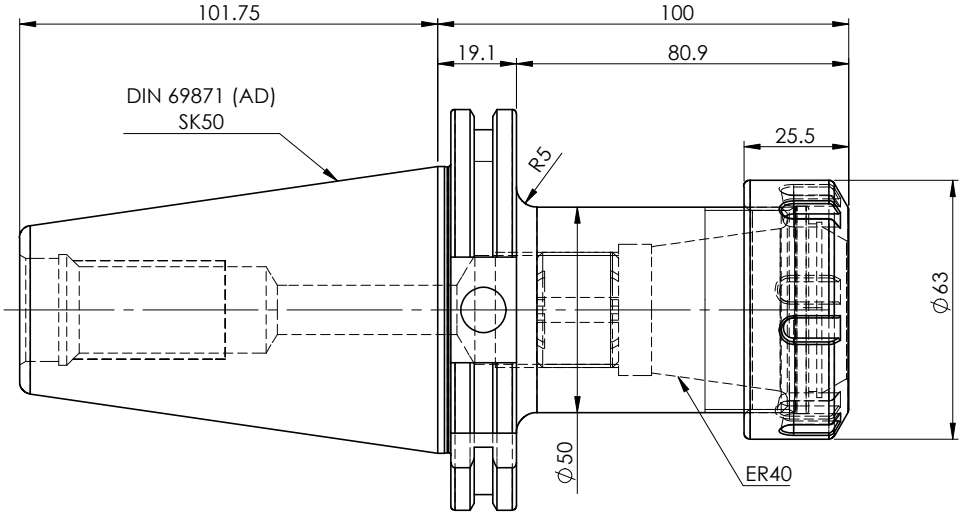

LABEL :

2002362.0701
SPANNZANGEFUTTER
ER COLLET CHUCK HOLDER
ISO 7388-1 (DIN 69871) SK50 AD
ER40 x 100 mm
G6.3 / 15000 U/MIN

NOTE:

BALANCING 6.3G @ 15000 RPM

WEIGHT:3.2Kg

MARKING : ISO 7388-1 (DIN 69871) SK50 AD CCH ER40 H100
G6.3 15000 U/MIN

ITEM NO.	PART NUMBER	DESCRIPTION	QTY.
1	FWS501A-ERS40100	SK50CCHER40100WW	1
2	SCWM28X1.5	STOPPER SCREW-(B.O)	1
3	NUT ER 40	COLLET NUT	1

μ m	0.012	0.025	0.05	0.1	0.2	0.4	0.8	1.6	3.2	6.3	12.5	25	50
GRADES		N1	N2	N3	N4	N5	N6	N7	N8	N9	N10	N11	N12
SYMBOLS													

TOLERANCE		
FREE DIMENSIONS TOLERANCE		
Dimns.	Dia	Length
0.5 to 3	± 0.05	± 0.10
3 to 6	± 0.10	± 0.15
6 to 30	± 0.15	± 0.20
30 to 120	± 0.20	± 0.25
120 to 500	± 0.30	± 0.50

MATERIALS: 16MnCr5

2022	NAME	DATE
DRAWN	SVR	31/01
CHECKED	RVL	31/01
APPROVED		
SCALE : NTS	QTY. :	

2002362.0701

PART NAME: SK50CCHER40100WW

DRAWING No. FWS501A-ERS40100

REV. 00