Rev.No.	Ch.Let	Alterations	Date	Sign.	Appd.

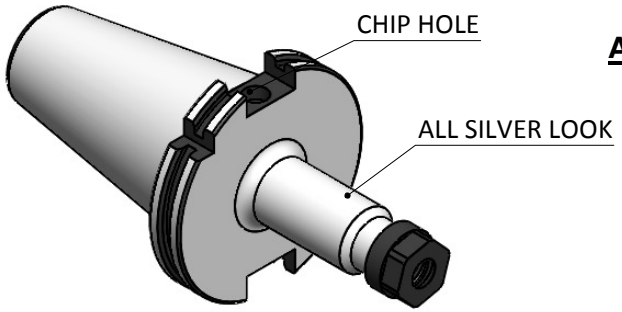

All Dimensions are in MM

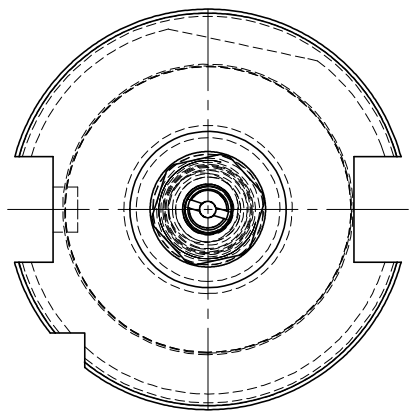

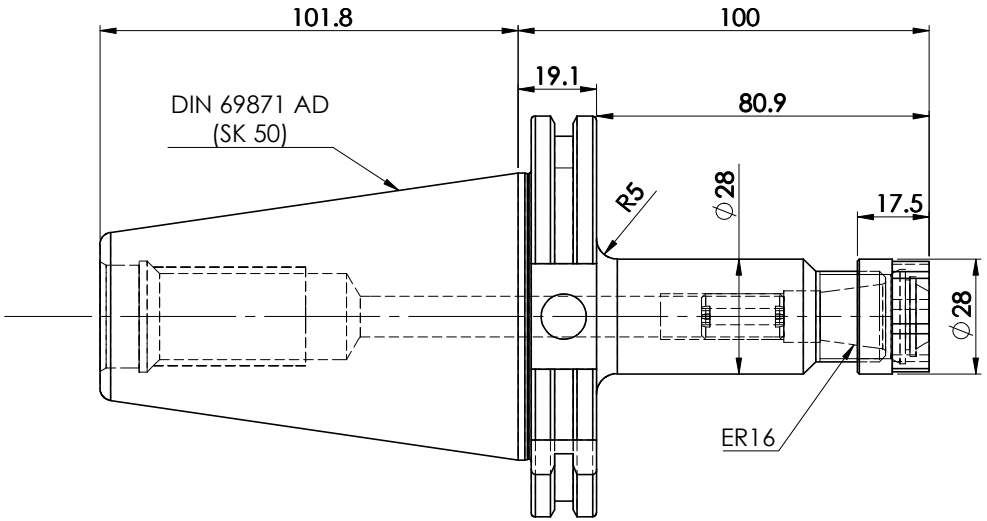

LABEL :

2002362.0301
SPANNZANGENFUTTER
ER COLLET CHUCK HOLDER
SECHSKANTMUTTER
HEXOGONAL NUT
ISO7388-1 (DIN69871) SK50 AD
ER16 x 100 mm
G6,3 / 15000 U/min

MARKING :ISO7388-1 (DIN 69871)SK50 AD CCH ER16 H100
G6.3 15000 U/MIN

ITEM NO.	PART NUMBER	DESCRIPTION	QTY.
1	FWS501A-ERH16100	SK50CCHER16100WW	1
2	FTNUTER16	COLLET NUT	1
3	SCW7/16-20UNF	STOPPER SCREW	1

NOTE:

BALANCING 6.3G @ 15000 RPM

WEIGHT :2.9 Kg.

		μ m	0.012	0.025	0.05	0.1	0.2	0.4	0.8	1.6	3.2	6.3	12.5	25	50
		GRADES		N1	N2	N3	N4	N5	N6	N7	N8	N9	N10	N11	N12
		SYMBOLS													

TOLERANCE			MATERIALS:	2021	NAME	DATE	
FREE DIMENSIONS TOLERANCE			16MnCr5	DRAWN	SVR	08/10	2002362.0301
Dimns.	Dia	Length		CHECKED	RVL	08/10	
0.5 to 3	± 0.05	± 0.10		APPROVED			
3 to 6	± 0.10	± 0.15		SCALE : NTS	QTY. :		
6 to 30	± 0.15	± 0.20	PART NAME:			DRAWING No.	REV.
30 to 120	± 0.20	± 0.25	SK50CCHER16100WW			FWS501A-ERH16100	00
120 to 500	± 0.30	± 0.50					