Rev.No.	Ch.Let	Alterations	Date	Sign.	Appd.

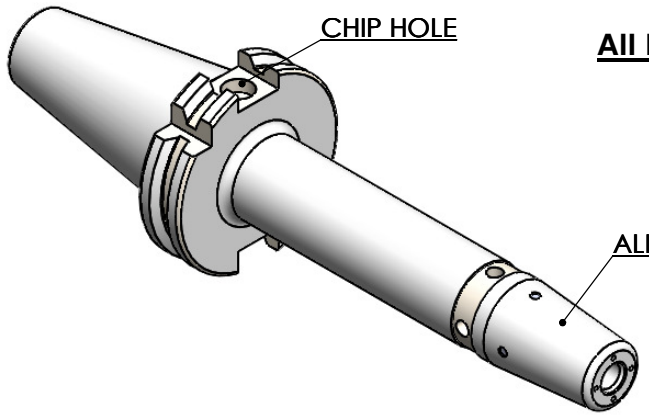

All Dimensions are in MM

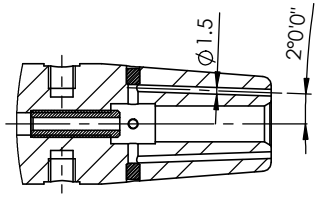

SECTION A-A

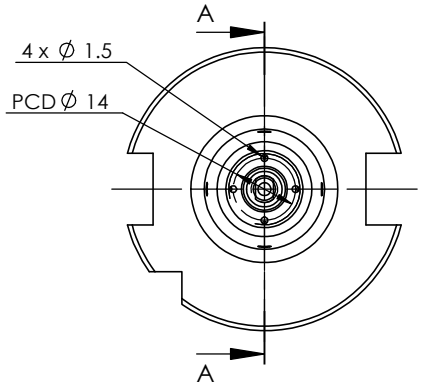

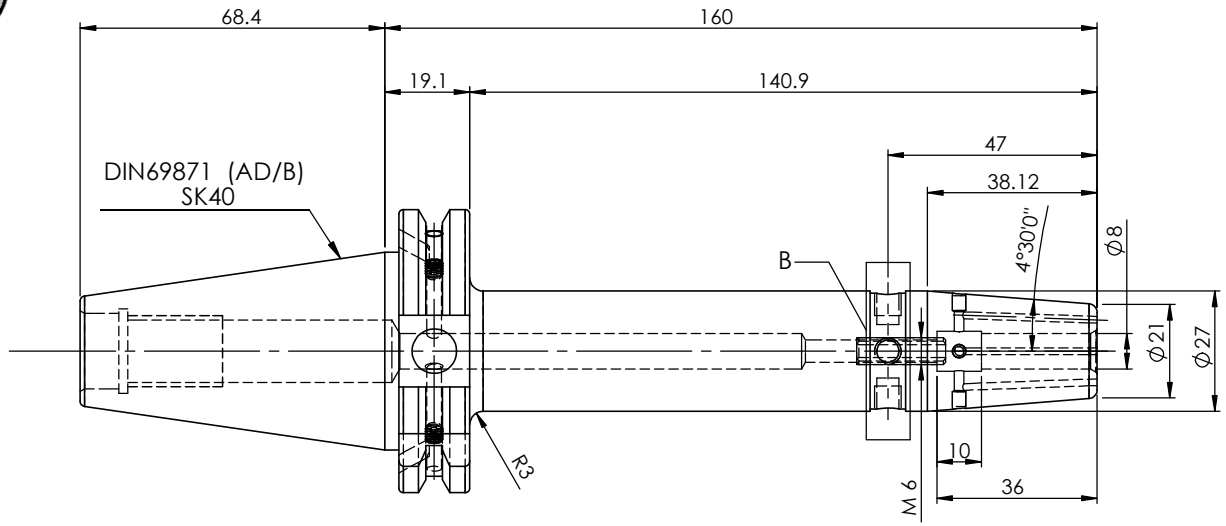

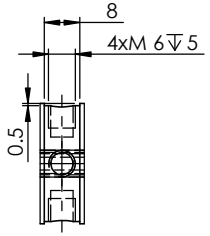

DETAIL B

LABEL :
2002266.0802
SCHRUMPFFUTTER MIT KK
SHRINK FIT HOLDER COOLANT CHANNEL
ISO 7388-1 (DIN69871) SK40 AD/AF (AD+B)
SR4 08mm X 160mm
G2,5/25000 U/MIN

NOTE :

BALANCING 2.5G@ 25000 RPM

Weight : 1.3 Kg

MARKING : ISO 7388-1 (DIN69871) SK40 AD/AF (AD+B) SFHC08H160
G2,5/25000 U/MIN

ITEM NO.	PART NUMBER	DESCRIPTION	QTY.
1	F1S409H-SFK08160	SK40SFK08160FWW	1
2	SCWM6x1x20-FLAT	STOPPER SCREW (B.O.)	1
3	EXPANDER PLUG-22880.0053	EXPANDER PLUG-Ø3x3.6mm	4
4	GS-M4X4	GRUB SCREW	2

μ m	0.012	0.025	0.05	0.1	0.2	0.4	0.8	1.6	3.2	6.3	12.5	25	50
GRADES		N1	N2	N3	N4	N5	N6	N7	N8	N9	N10	N11	N12
SYMBOLS		▽▽▽▽				▽▽▽		▽▽			▽		~

TOLERANCE		
FREE DIMENSIONS TOLERANCE		
Dimns.	Dia	Length
0.5 to 3	± 0.05	± 0.10
3 to 6	± 0.10	± 0.15
6 to 30	± 0.15	± 0.20
30 to 120	± 0.20	± 0.25
120 to 500	± 0.30	± 0.50

MATERIALS: HDS

2022	NAME	DATE
DRAWN	SVR	29/01
CHECKED	RVL	29/01
APPROVED		
SCALE : NTS	QTY. :	

2002266.0802

PART NAME: **SK40SFK08160FWW**

DRAWING No. F1S409H-SFK08160

REV. 00