| Rev.No. | Ch.Let | Alterations | Date | Sign. | Appd. |
|---|---|---|---|---|---|
| | | | | | |
| | | | | | |
| | | | | | |

**All Dimensions are in MM**

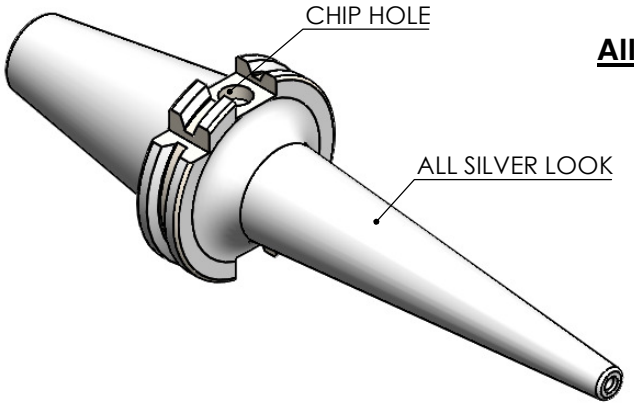


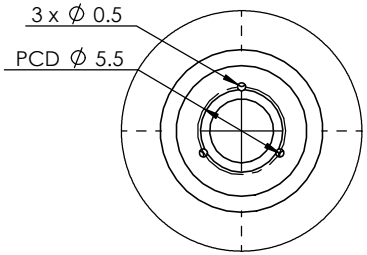


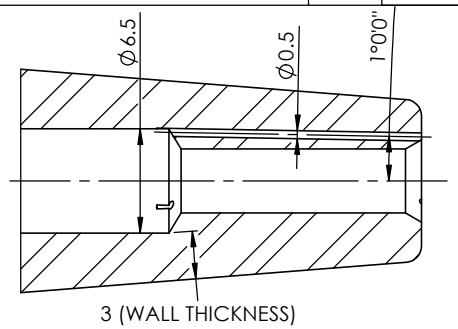


SECTION A-A
SCALE 3 : 1

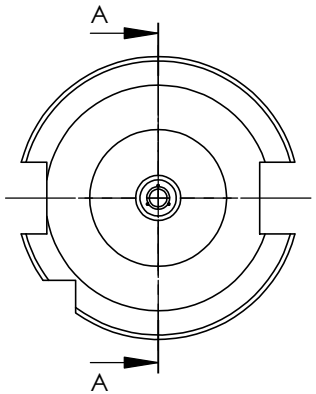


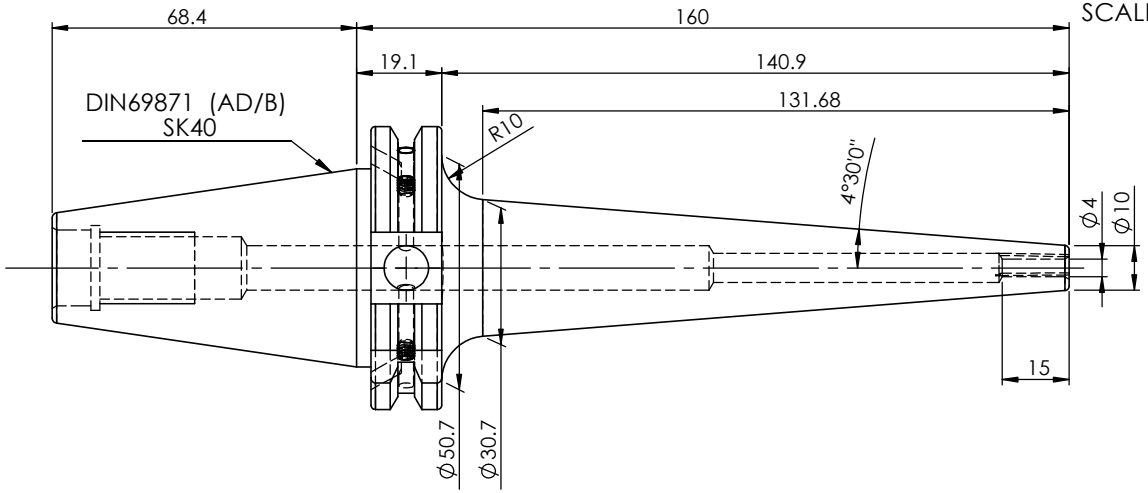


**LABEL :**

**2002266.0402**
**SCHRUMPFFUTTER MIT KK**
**SHRINK FIT HOLDER COOLANT CHANNEL**
**ISO 7388-1 (DIN69871) SK40 AD/AF (AD+B)**
**SR4 04mm X 160mm**
**G2,5/25000 U/MIN**

**MARKING : ISO 7388-1 (DIN69871) SK40 AD/AF (AD+B) SFHC04H160**
**G2,5/25000 U/MIN**

**NOTE: WITHOUT BALANCING SCREW HOLES**

| ITEM NO. | PART NUMBER | DESCRIPTION | QTY. |
|---|---|---|---|
| 1 | F1S409H-SFK04160 | SK40SFK04160FWW | 1 |
| 2 | GS-M4X4 | GRUB SCREW | 2 |

**NOTE :**

**BALANCING 2.5G@ 25000 RPM**

**Weight : 1.2 Kg**

| | | | | | | | | | | | | | | | | | |
|---|---|---|---|---|---|---|---|---|---|---|---|---|---|---|---|---|---|
| | | μ m | 0.012 | 0.025 | 0.05 | 0.1 | 0.2 | 0.4 | 0.8 | 1.6 | 3.2 | 6.3 | 12.5 | 25 | 50 |
| | | GRADES | | N1 | N2 | N3 | N4 | N5 | N6 | N7 | N8 | N9 | N10 | N11 | N12 |
| | | SYMBOLS | | | | | | | | | | | | | |

| TOLERANCE | | |
|---|---|---|
| FREE DIMENSIONS TOLERANCE | | |
| Dimns. | Dia | Length |
| 0.5 to 3 | ± 0.05 | ± 0.10 |
| 3 to 6 | ± 0.10 | ± 0.15 |
| 6 to 30 | ± 0.15 | ± 0.20 |
| 30 to 120 | ± 0.20 | ± 0.25 |
| 120 to 500 | ± 0.30 | ± 0.50 |

MATERIALS: HDS

| 2022 | NAME | DATE |
|---|---|---|
| DRAWN | SVR | 29/01 |
| CHECKED | RVL | 29/01 |
| APPROVED | | |
| SCALE : NTS | QTY. : | |

**2002266.0402**

PART NAME: **SK40SFK04160FWW**

DRAWING No. F1S409H-SFK04160

REV. 00